HIOS®

CLT-45

Power Supply Operation Manual
for the HIOS Electric Screwdrivers

15A (July 2015) No.ET-A026

HIOS Inc.
111-6 Akiyama, Matsudo City,
Chiba Pref., Japan
TEL: 81-47-392-2001
FAX: 81-47-392-7773

Please read this operation manual carefully and use the CLT-45 properly.

＜Function＞The CLT-45T is the Power Supply to be used with the HIOS Electric Screwdriver series.

■A place to install the CLT-45

1. The unit should be used in a temperature and humidity-controlled room. Keep the unit away from a place with poor ventilation, in dust or metal pieces.
2. Do not place any objects on the unit.
3. The place to install the unit should be vibration-free and the unit should be securely fixed. If the unit is installed on the wall or on a high place, make sure to use the attached Mounting Bracket to fix it securely.
4. Do not install the unit close to high voltage equipments.

■Operating Precautions

1. **Do not drop the power Supply or subject it to violent impact.**
2. Install a leakage breaker and safety breaker on the input power source and connect the ground to use the unit.
3. Connect to a power source of the specified voltage.
4. Do not use with other drivers or devices except the models listed in this operation manual.
5. If the protection circuit works due to overheat, stop operation immediately, pull the power plug from the outlet and send it back to your HIOS distributor for repair.
6. The unit may automatically stop in use when the protection circuit works due to overcurrent, etc. Turn off the power switch once and turn it on in 5 sec for restart. If the unit stops while in screw tightening, make sure to check the torque of the tightened screw.
7. Do not disassemble or modify the unit.
8. Do not drag the unit by its driver cord or AC cord. Keep the cords away from foreign objects, oil or something sharp.
9. Make sure to grasp the plug section to disconnect the AC cord from the outlet.
10. Turn the unit off and disconnect the AC cord from the outlet when the unit is not in use.
11. IMPORTANT SAFETY INSTRUCTIONS-SAVE THESE INSTRUCTIONS.
12. DANGER-TO REDUCE THE RISK OF FIRE OR ELECTRIC SHOCK. CAREFULLY FOLLOW THESE INSTRUCTIONS.

■The HIOS driver models to use with the CLT-45

Power pack Model	Number	Model
CLT-45	For one dirver	CL-2000、CL-3000、CL-4000、CL-6000、CL-6500
		SS-2000、SS-3000、SS-4000、SS-6500
		α-4500、α-5000

・These models may not perform properly if the torque is higher than using HIOS Fidapter such as HP-10, HP-100.

■Specification

Power Pack Model		CLT-45
Primary side	Input voltage	AC100 - 240V 47-63 Hz
	Power consumption	45VA-78VA
	Fuse capacity	3.15A/250V (Built-in)
Output voltage		2(30V),1(20V) Two stage settings
Size (mm)		See Figure
Weight(g)		About 330 g

■Accessories

AC Cord 1.8m 1 piece
Mounting bracket 1 piece
Screw 1 piece

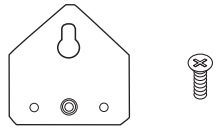

■Dimension and Part Names

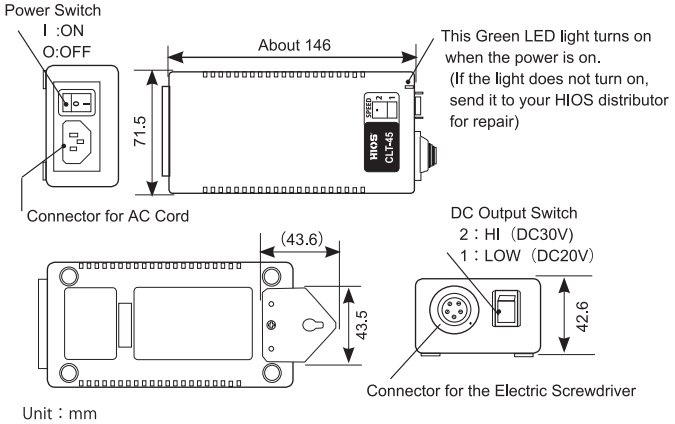

(Caution) ・The above dimensions do not include concavity and convexity.
・The above drawing is not a full-scale.

■Mounting Bracket

Make sure to use the attached Mounting Bracket and the screw to fix the unit securely if you install it on the work table, the wall, etc.

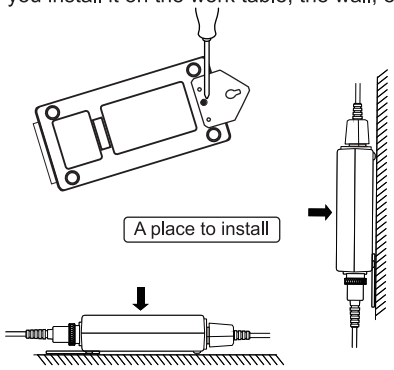

Selection of Power Supply Cord:

Use in U.S.A. - Use UL Listed detachable power supply cord, No.18AWG,3 conductors, flexible cord, rated 10A, VW-1, 80° C, minimum 1.8 m, maximum 3 m long. Provided with a molded-on, non-polarized attachment plug with a 15A, 125V (NEMA5-15P) or 15A, 250 V (NEMA 6-15P) configuration and a molded-on connector which mates with the Power Inlet.

The following flexible cord type may be used: S, SE, SO, SP-3, SPT-3, ST,STO, SJ, SJE, SJO, SJT, SJTO, SP-2, SPE-2, SPT-2, SV, SVE, SVT.

Use in countries other than U.S.A. - Use IEC60227 certified PVC flexible power supply cord, marked H03VVF or H05VVF, 3C x 0.75 mm², rated min. 10A, 250V